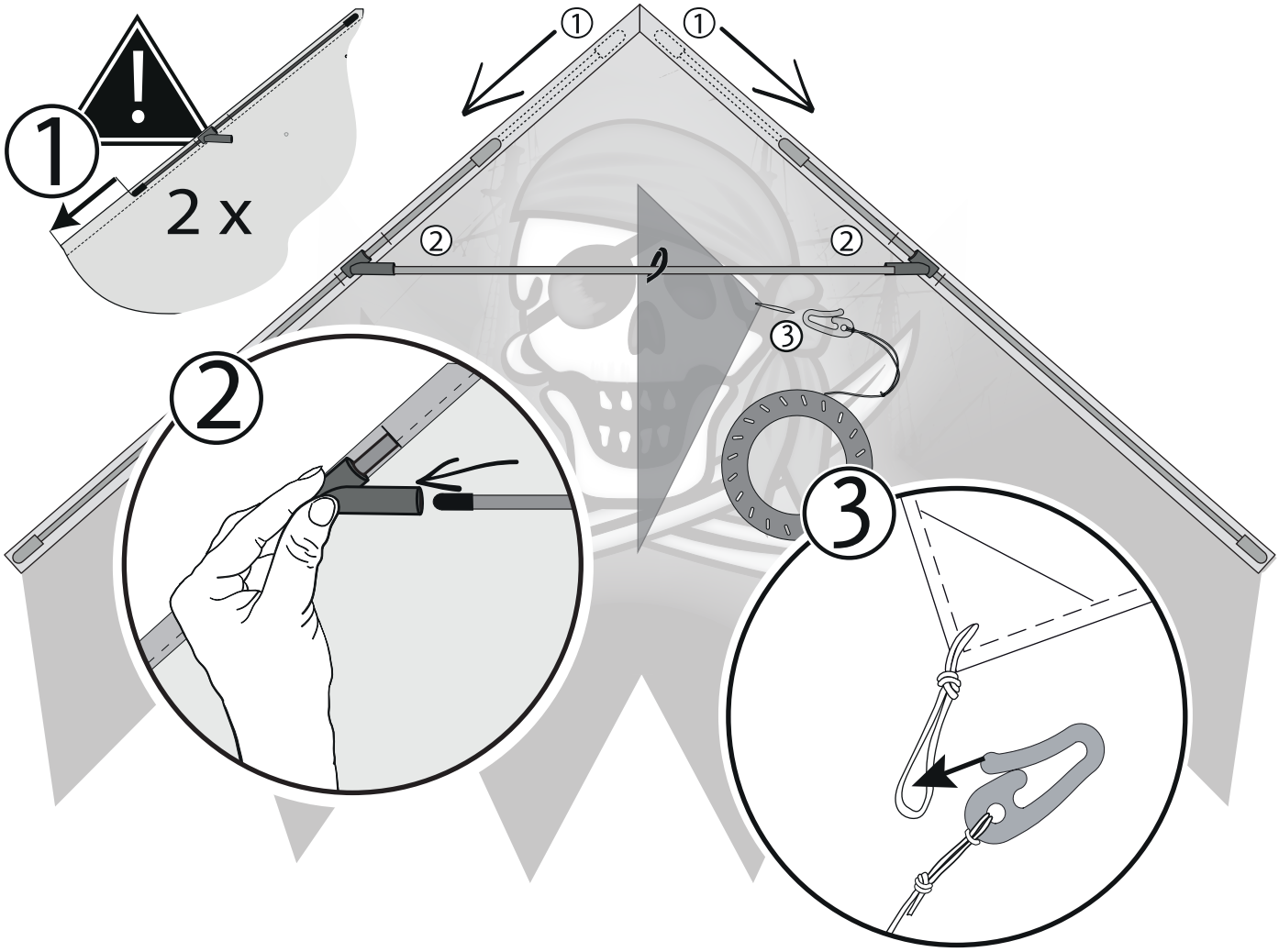
1
2 x
①
①
②
②
③
2
3